MADE IN INDIA

EXPAND smERP®
Get Set Grow

ERP on CLOUD

THE 'QUICK START' ERP

YOUR BUSINESS YOUR WAY



eDOMINER®
Your joint venture with success

Kolkata

Delhi NCR

Bengaluru

Mumbai

*Scan for **Offer**

Contact Us

eDominer Technologies Private Limited

Head office: 304, Continental
83/2/1, Topsia Road (S) Kolkata - 700046

+91 9007026542

sales@edominer.com

www.expanderp.com

EFFICIENCY

Start saving 5% time in a day spent on maintining spreadsheet

PRODUCTIVITY

Start saving 20% time in a day spent on searching documents

SECURITY

Automatic Backup, no more losing data on pendrive and hard disk

ACCESSIBILITY

Freedom of access from Anywhere Anytime



© 2023 eDominer Technologies Private Limited All Rights Reserved

+91 9007026542 www.expanderp.com sales@edominer.com

INCOTERMS

Language is one of the most complex and important tools of International Trade. As in any complex and sophisticated business, small changes in wording can have a major impact on all aspects of a business agreement.

Word definitions often differ from industry to industry. This is especially true of global trade. Where such fundamental phrases as "delivery" can have a far different meaning in the business than in the rest of the world.

For business terminology to be effective, phrases must mean the same thing throughout the industry. That is why the International Chamber of Commerce created "INCOTERMS" in 1936. INCOTERMS are designed to create a bridge between different members of the industry by acting as a uniform language they can use.

Each INCOTERM refers to a type of agreement for the purchase and shipping of goods internationally. There are 11 different terms, each of which helps users deal with different situations involving the movement of goods. For example, the term FCA is often used with shipments involving Ro/Ro or container transport.

INCOTERMS also deal with the documentation required for global trade, specifying which parties are responsible for which documents. Determining the paperwork required to move a shipment is an important job, since requirements vary so much between countries. Two items, however, are standard: the commercial invoice and the packing list.

INCOTERMS were created primarily for people inside the world of global trade. Outsiders frequently find them difficult to understand. Seemingly common words such as "responsibility" and "delivery" have different meanings in global trade than they do in other situations.

In global trade, "delivery" refers to the seller fulfilling the obligation of the terms of sale or to completing a contractual obligation. "Delivery" can occur while the merchandise is on a vessel on the high seas and the parties involved are thousands of miles from the goods. In the end, however, the terms wind up boiling down to a few basic specifics:



Did you know?

70% documents are rejected on initial submission to bank

© 2023 eDominer Technologies Private Limited All Rights Reserved

INTERNATIONAL TERMS OF PAYMENT

Method	Usual Time of Payment	Goods Available To Buyer
CASH IN ADVANCE	Before shipment	After payment
LETTER OF CREDIT (L/C) (See next two items.)		
CONFIRED IRREVOCABLE CREDIT	After shipment is made, documents presented to the bank.	After payment
UNCONFIRMED IRREVOCABLE CREDIT	Same as above	Same as above
DRAFTS (See next two items.)	Remittance time from buyer's bank to seller's bank may still take one week to one month.	

Risk to seller	Risk to buyer	Comments
None	Complete. Relies on seller to ship exactly the goods. expected, as quoted and ordered	Seller's goods must be special in one way or another, or special circumstances prevail over normal trade practices (e.g., goods manufactured to buyer-only specification).
Commerical Invoice must match the L/C exactly. Dates must be carefully headed. "Stale" documents are unacceptable for collection.		Letters of Credit require total accuracy in conforming to terms, conditions, and documentaion. Consult your United Shipping Associate member for determining feasibility of terms and conditions.

© 2023 eDominer Technologies Private Limited All Rights Reserved

Risk to seller	Risk to buyer	Comments
Gives the seller a double assurance of payments. Depends on the terms of the letter of credit	Assures shipment is made but relies on exporter to ship goods as described in documents. Terms may be negotiated prior to L/C agreement, alleviating buyer's degree of risk.	The inclusion of a second assurance of payment (usually a U.S. Bank) prevents surprises, and adds. assurance that issuing bank has been deemed acceptable by confirming bank. Adds cost and an additional requirement to seller.
Seller has single bank Same as above assurance of payment and seller remains dependent on foreign bank. Seller should. contact his banker to determine whether the issuing bank has sufficient assests to cover the amount.	Same as above	Credit can be changed only by mutual agreement, as stipulated in a sales agreement. Becomes open account with buyer's bank as collection agent. Foreign bank may have problems making payment in sum or timeliness.
Drafts, by design, should contain terms and conditions mutually agreed upon.		A draft may be written with virtually any term or condition agreeable to both parties. When determining draft tenor (terms and conditions), consult with your banker and freight forwarder to determine the most desirable means of doing business in a given country.

Method	Usual Time of Payment	Goods Available To Buyer
SIGHT DRAFT (with documents against acceptance)	On presentation of draft to buyer.	After payment to buyer's bank.
TIME DRAFTS (with documents against acceptance)	On maturity of the draft	Before payment, after acceptance
OPEN ACCOUNT	As agreed, usually by invoice	Before payment

Terms Ranked from LEAST

© 2023 eDominer Technologies Private Limited All Rights Reserved

Risk to seller	Risk to buyer	Comments
If draft not honored, goods must be returned or resold. Storage, handling, and return freight expenses may be incurred.	Assures shipment but not content, unless inspection or check-in is allowed before payment.	A draft can be a collection instrument used to exchange possession and title to goods for payment. Seller is essentially drawing a check against the bank account of the buyer. Buyer's bank must have pre-approval, or seek approval of the buyer prior to honoring the check. Payble upon presentation of documents.
Relies on buyer to honor draft assures shipment upon presentation.	Assures shipment but not content. Time of maturity allows for adjustments, if agreed to by seller.	Payable based upon the acceptance of an obligation to pay the seller at a specified time. Although a time draft has more collection leverage than an invoice, it remains only a promissory note, with conditions.
Relies completely on buyer to pay account as agreed	None	All terms of payment, including extra charges and terms should be mutually understood and agreed upon prior to open account initiation. Companies conducting ongoing business are candidates for open account terms of payment. Seller must measure not only buyer's credit reliability but the country's as well.

RISK to MOST RISK for the Seller

© 2023 eDominer Technologies Private Limited All Rights Reserved

INTERNATIONAL TERMS OF DELIVERY

EXW Ex Works

The seller makes the goods available at their premises. This term places the maximum obligation on the buyer and minimum obligations on the seller. The Ex Works term is often used when making an initial quotation for the sale of goods without any costs included. EXW means that a buyer incurs the risks for bringing the goods to their final destination. Either the seller does not load the goods on collecting vehicles and does not clear them for export, or if the seller does load the goods, he does so at buyer's risk and cost. If parties wish seller to be responsible for the loading of the goods on departure and to bear the risk and all costs of such loading, this must be made clear by adding explicit wording to this effect in the contract of sale. The buyer arranges the pickup of the freight from the supplier's designated ship site, owns the in-transit freight, and is responsible for clearing the goods through Customs. The buyer is also responsible for completing all the export documentation.

FCA Free Carrier

The seller delivers the goods, cleared for export, at a named place. This can be to a carrier nominated by the buyer, or to another party nominated by the buyer. It should be noted that the chosen place of delivery has an impact on the obligations of loading and unloading the goods at that place. If delivery occurs at the seller's premises, the seller is responsible for loading the goods on to the buyer's carrier. However, if delivery occurs at any other place, the seller is deemed to have delivered the goods once their transport has arrived at the named place; the buyer is responsible for both unloading the goods and loading them onto their own carrier.

CPT Carriage Paid To

The seller pays for the carriage of the goods up to the named place of destination. Risk transfers to buyer upon handing goods over to the first carrier at the place of shipment in the country of Export. The Shipper is responsible for origin costs including export clearance and freight costs for carriage to named place (usually a destination port or airport). The shipper is not responsible for delivery to the final destination (generally the buyer's facilities), or for buying insurance. If the buyer does require the seller to obtain insurance, the Incoterm CIP should be considered.

CIP Carriage and Insurance Paid to

This term is broadly similar to the above CPT term, with the exception that the seller is required to obtain insurance for the goods while in transit. CIP requires the seller to insure the goods for 110% of their value under at least the minimum cover of the Institute Cargo Clauses of the Institute of London Underwriters (which would be Institute Cargo Clauses (C)), or any similar set of clauses. The policy should be in the same currency as the contract. CIP can be used for all modes of transport, whereas the equivalent term CIF can only be used for non-containerised seafreight.

© 2023 eDominer Technologies Private Limited All Rights Reserved

DAT Delivered at Terminal

This term means that the seller covers all the costs of transport (export fees, carriage, unloading from main carrier at destination port and destination port charges) and assumes all risk until destination port or terminal. The terminal can be a Port, Airport, or inland freight interchange. Import duty/taxes/customs costs are to be borne by Buyer.

DAP Delivered at Place

Can be used for any transport mode, or where there is more than one transport mode. The seller is responsible for arranging carriage and for delivering the goods, ready for unloading from the arriving conveyance, at the named place. Duties are not paid by the seller under this term. The seller bears all risks involved in bringing the goods to the named place.

DDP Delivered Duty Paid

Seller is responsible for delivering the goods to the named place in the country of the buyer, and pays all costs in bringing the goods to the destination including import duties and taxes. The seller is not responsible for unloading. This term places the maximum obligations on the seller and minimum obligations on the buyer. With the delivery at the named place of destination all the risks and responsibilities are transferred to the buyer and it is considered that the seller has completed his obligations.

FAS Free Alongside Ship

The seller delivers when the goods are placed alongside the buyer's vessel at the named port of shipment. This means that the buyer has to bear all costs and risks of loss of or damage to the goods from that moment. The FAS term requires the seller to clear the goods for export, which is a reversal from previous Incoterms versions that required the buyer to arrange for export clearance. However, if the parties wish the buyer to clear the goods for export, this should be made clear by adding explicit wording to this effect in the contract of sale. This term can be used only for sea or inland waterway transport.

FOB Free on Board

FOB means that the seller pays for delivery of goods to the vessel including loading. The seller must also arrange for export clearance. The buyer pays cost of marine freight transportation, bill of loading fees, insurance, unloading and transportation cost from the arrival port to destination. The buyer arranges for the vessel, and the shipper must load the goods onto the named vessel at the named port of shipment according to the dates stipulated in the contract of sale as informed by the buyer. Risk passes from the seller to the buyer when the goods are loaded aboard the vessel.

© 2023 eDominer Technologies Private Limited All Rights Reserved

CFR Cost and Freight

The seller pays for the carriage of the goods up to the named port of destination. Risk transfers to buyer when the goods have been loaded on-board on the ship in the country of Export. The Shipper is responsible for origin costs including export clearance and freight costs for carriage to named port. The shipper is not responsible for delivery to the final destination from the port (generally the buyer's facilities), or for buying insurance. If the buyer does require the seller to obtain insurance, the Incoterm CIF should be considered. CFR should only be used for non-containerized seafreight; for all other modes of transport it should be replaced with CPT.

CIF Cost, Insurance & Freight

This term is broadly similar to the above CFR term, with the exception that the seller is required to obtain insurance for the goods while in transit to the named port of destination. CIF requires the seller to insure the goods for 110% of their value under at least the minimum cover of Cargo Clauses of the Institute of London Underwriters (which would be Institute Cargo Clauses (C)), or any similar set of clauses. The policy should be in the same currency as the contract. CIF should only be used for non-containerized seafreight; for all other modes of transport it should be replaced with CIP.

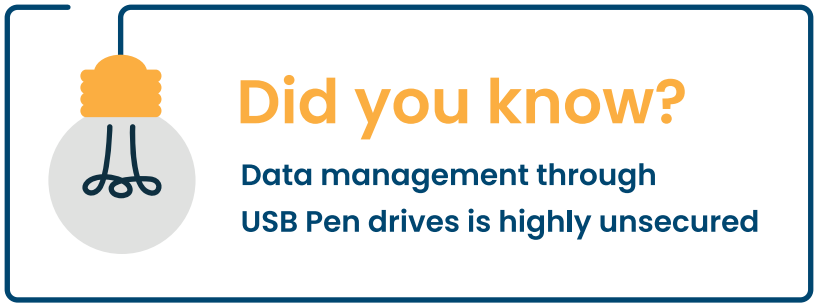

© 2023 eDominer Technologies Private Limited All Rights Reserved

METRIC BASICS

The three basic metric units are the meter (length), the gram (weight) and the liter (volume). The key to metric prefixes are :

1000 = kilo	0.1 = deci
100 = hecto	0.01 = centi
10 = deca	0.001 = milli

COMMON MEASUREMENTS

Length

1 kilometer = 0.62137 mi	1 mile = 1.6093 km
1 meter = 3.2808 ft	1 foot = 0.3048 m
1 centimeter = 0.3937 in	1 inch = 2.54 cm

Weight

1 kilogram = 2.2046 lbs	1 pound = 0.4536 kilos
1 gram = 0.0353 oz	1 ounce = 28.3495 g
1 short ton = 907.1847 kilos	

Volume

1 hectoliter = 100 l = 0.1 m^3 = 26.4172 gal	1 liter = 100 cl = 1 dm^3 = 1.0567 qt
1 gallon (U.S.) = 3.7853 l	1 cubic inch = 16.9871 cm^3

Area

1 square kilometer = 1 million m^2 = 0.3861 mi^2	
1 hectare = 10.000 m^2 = 2.471 acres	1 square mile = 640 acres = 258.9988 ha^2
1 square = 10.7639 ft^2 = 1550.003 in^2	1 square foot = 144 in^2 = 929.0304 cm^2

© 2023 eDominer Technologies Private Limited All Rights Reserved

EASY CONVERSIONS

	Symbol	If you know	Multiple by	To find	Symbol
Length	mm	millimeters	0.03937	inches	in
	cm	centimeters	0.3937	inches	in
	m	meters	3.3	feet	ft
	m	meters	1.1	yards	yd
	km	kilometers	0.62	miles	mi
	in	inches	2.54	centimeters	cm
	ft	feet	30.48	centimeters	cm
	yd	yards	0.9144	meters	m
Area	cm^2	square centimeters	0.16	square inches	in^2
	m^2	square meters	1.2	square yards	yd^2
	km^2	square kilometers	0.4	square miles	mi^2
	ha^2	hectares (10000 m)	2.5	acres	
	in^2	square inches	6.5	square centimeters	cm^2
	ft^2	square feet	0.09	square meters	m^2
	yd^2	square yards	0.8	square meters	m^2
	mi^2	square miles	2.6	square kilometer	km^2
Weight	g	grams	0.035	ounce	oz
	kg	kilograms	2.2046	pounds	lb
	t	tonnes (1000 kg)	1.1	short tons	
	oz	ounces	28.23495	grams	g
	lb	pounds	0.45	kilograms	kg
Volume	ml	milliliters	0.03	fluid ounces	fl oz
	l	liters	2.1	pints	pt
	l	liters	1.06	quarts	qt
	l	liters	0.26	gallons	gal
	m^3	cubic meters	35.314	cubic feet	ft^3
	m^3	cubic meters	1.3	cubic yards	yd^3
	tsp	teaspoons	5	milliliters	ml
	tbsp	tablespoons	15	milliliters	ml
	fl oz	fluid ounces	30	milliliters	ml
	c	cups	0.24	liters	l
	pt	pints	0.47	liters	l
	qt	quarts	0.97	liters	l
	gal	gallons	3.8	liters	l
	ft^3	cubic feet	0.03	cubic meters	m^3
	yd^3	cubic yards	0.76	cubic meters	m^3

© 2023 eDominer Technologies Private Limited All Rights Reserved

WORLD MAP OF TIMEZONES

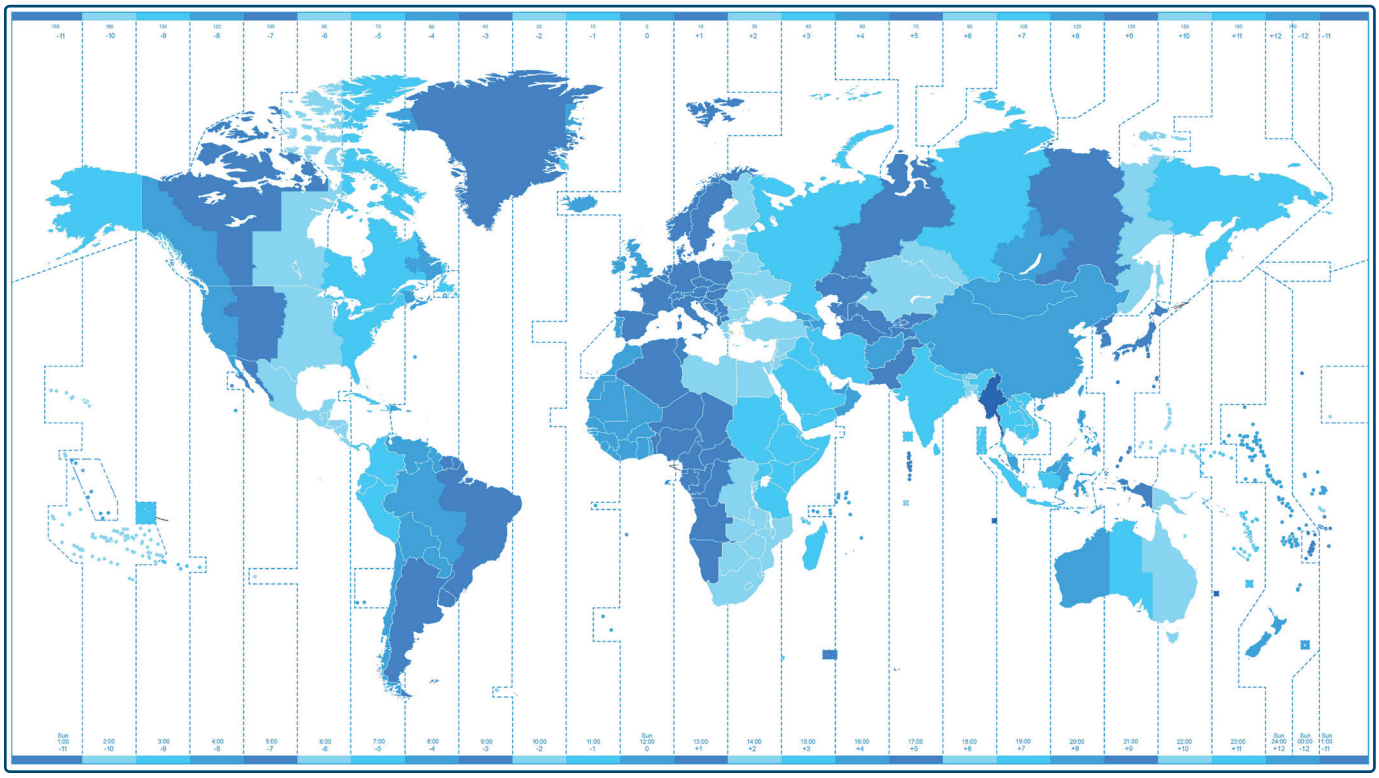

(UTC-12:00) International Date Line West, Etc/GMT+12
(UTC-11:00) Coordinated Universal Time-11, Etc/GMT+11
(UTC-10:00) Hawaii, Pacific/Honolulu
(UTC-09:00) Alaska, America/Anchorage
(UTC-08:00) Baja California, America/Santa Isabel
(UTC-08:00) Pacific Time (US and Canada), America/Los Angeles
(UTC-07:00) Chihuahua, La Paz, Mazatlan, America/Chihuahua
(UTC-07:00) Arizona, America/Phoenix
(UTC-07:00) Mountain Time (US and Canada), America/Denver
(UTC-06:00) Central America, America/Guatemala
(UTC-06:00) Central Time (US and Canada), America/Chicago
(UTC-06:00) Saskatchewan, America/Regina
(UTC-06:00) Guadalajara, Mexico City, Monterey, America/Mexico City
(UTC-05:00) Bogota, Lima, Quito, America/Bogota
(UTC-05:00) Indiana (East), America/Indiana/Indianapolis
(UTC-05:00) Eastern Time (US and Canada), America/New York
(UTC-04:30) Caracas, America/Caracas
(UTC-04:00) Atlantic Time (Canada), America/Halifax
(UTC-04:00) Asuncion, America/Asuncion
(UTC-04:00) Georgetown, La Paz, Manaus, San Juan, America/La Paz
(UTC-04:00) Cuiaba, America/Cuiaba
(UTC-04:00) Santiago, America/Santiago
(UTC-03:30) Newfoundland, America/St_Johns
(UTC-03:00) Brasilia, America/Sao_Paulo
(UTC-03:00) Greenland, America/Godthab
(UTC-03:00) Cayenne, Fortaleza, America/Cayenne
(UTC-03:00) Buenos Aires, America/Argentina/Buenos Aires
(UTC-03:00) Montevideo, America/Montevideo
(UTC-02:00) Coordinated Universal Time-2, Etc/GMT+2
(UTC-01:00) Cape Verde, Atlantic/Cape Verde
(UTC-01:00) Azores, Atlantic/Azores
(UTC+00:00) Casablanca, Africa/Casablanca
(UTC+00:00) Monrovia, Reykjavik, Atlantic/Reykjavik
(UTC+00:00) Dublin, Edinburgh, Lisbon, London Europe/London
(UTC+00:00) Coordinated Universal Time, Etc/GMT
(UTC+01:00) Amsterdam, Berlin, Bern, Rome, Stockholm, Vienna, Europe/Berlin
(UTC+01:00) Brussels, Copenhagen, Madrid, Paris, Europe/Paris
(UTC+01:00) West Central Africa, Africa/Lagos
(UTC+01:00) Belgrade, Bratislava, Budapest, Ljubljana, Prague Europe/Budapest
(UTC+01:00) Sarajevo, Skopje, Warsaw, Zagreb Europe/Warsaw
(UTC+01:00) Windhoek, Africa/Windhoek
(UTC+02:00) Athens, Bucharest, Istanbul, Europe/Istanbul
(UTC+02:00) Helsinki, Kyiv, Riga, Sofia, Tallinn, Vilnius, Europe/Kiev
(UTC+02:00) Cairo, Africa/Cairo
(UTC+02:00) Damascus, Asia/Damascus
(UTC+02:00) Amman, Asia/Amman
(UTC+02:00) Harare, Pretoria, Africa/Johannesburg
(UTC+02:00) Jerusalem, Asia/Jerusalem
(UTC+02:00) Beirut, Asia/Beirut
(UTC+03:00) Baghdad, Asia/Baghdad
(UTC+03:00) Minsk, Europe/Minsk
(UTC+03:00) Kuwait, Riyadh, Asia/Riyadh
(UTC+03:00) Nairobi, Africa/Nairobi
(UTC+03:30) Tehran, Asia/Tehran
(UTC+04:00) Moscow, St. Petersburg, Volgograd, Europe/Moscow
(UTC+04:00) Tbilisi, Asia/Tbilisi
(UTC+04:00) Yerevan, Asia/Yerevan
(UTC+04:00) Abu Dhabi, Muscat, Asia/Dubai
(UTC+04:00) Baku, Asia/Baku
(UTC+04:00) Port Louis, Indian/Mauritius
(UTC+04:30) Kabul, Asia/Kabul
(UTC+05:00) Tashkent, Asia/Tashkent
(UTC+05:00) Islamabad, Karachi, Asia/Karachi
(UTC+05:30) Sri Jayewardenepura Kotte, Asia/Colombo
(UTC+05:30) Chennai, Kolkata, Mumbai, New Delhi, Asia/Kolkata
(UTC+05:45) Kathmandu, Asia/Kathmandu
(UTC+06:00) Astana, Asia/Almaty
(UTC+06:00) Dhaka, Asia/Dhaka
(UTC+06:00) Yekaterinburg, Asia/Yekaterinburg
(UTC+06:30) Yangon, Asia/Yangon
(UTC+07:00) Bangkok, Hanoi, Jakarta, Asia/Bangkok
(UTC+07:00) Novosibirsk, Asia/Novosibirsk
(UTC+08:00) Krasnoyarsk, Asia/Krasnoyarsk
(UTC+08:00) Ulaanbaatar, Asia/Ulaanbaatar
(UTC+08:00) Beijing, Chongqing, Hong Kong, Urumqi, Asia/Shanghai
(UTC+08:00) Perth, Australia/Perth
(UTC+08:00) Kuala Lumpur, Singapore, Asia/Singapore
(UTC+08:00) Taipei, Asia/Taipei
(UTC+09:00) Irkutsk, Asia/Irkutsk
(UTC+09:00) Seoul, Asia/Seoul
(UTC+09:00) Osaka, Sapporo, Tokyo, Asia/Tokyo
(UTC+09:30) Darwin, Australia/Darwin
(UTC+09:30) Adelaide, Australia/Adelaide
(UTC+10:00) Hobart, Australia/Hobart
(UTC+10:00) Yakutsk, Asia/Yakutsk
(UTC+10:00) Brisbane, Australia/Brisbane
(UTC+10:00) Guam, Port Moresby, Pacific/Port_Moresby
(UTC+10:00) Canberra, Melbourne, Sydney, Australia/Sydney
(UTC+11:00) Vladivostok, Asia/Vladivostok
(UTC+11:00) Solomon Islands, New Caledonia, Pacific/Guadalcanal
(UTC+12:00) Coordinated Universal Time+12, Etc/GMT-12
(UTC+12:00) Fiji, Marshall Islands, Pacific/Fiji
(UTC+12:00) Magadan, Asia/Magadan
(UTC+12:00) Auckland, Wellington, Pacific/Auckland
(UTC+13:00) Nuku'alofa, Pacific/Tongatapu
(UTC+13:00) Samoa, Pacific/Apia

© 2023 eDominer Technologies Private Limited All Rights Reserved

METRIC TO U.S. CONVERSIONS

	Metric Measure	Multiple by	Equals U.S. Measure	Metric Measure	Multiple by	Equals U.S. Measure
Length	millimeter	x 0.0394	= inches	centimeter	x 0.3937	= inches
	meters	x 3.2808	= feet	meters	x 1.0936	= yards
	kilometers	x 0.6214	= miles			
Area	sq. cm.	x 0.155	= sq. inches	sq. meters	x 1.1960	= sq. yards
	sq. meters	x 0.3861	= sq. miles	hectares	x 2.4710	= acres
Weight	grams	x 0.0353	= ounces	kilograms	x 2.2046	= pounds
	tonnes	x 1.1	= short tons			
Volume	milliliters	x 0.0338	= fluid ounces	liters	x 2.1134	= pints
	liters	x 1.0567	= quarts	liters	x 0.2642	= gallons
	cubic meters	x 35.3145	= cubic feet	cubic meters	x 1.3079	= cubic yards
Temp.	centigrade	x 1.8 (+32)	= fahrenheit			

To calculate the approximate U.S. measure equivalent to a known metric measure, simply multiply the metric quantity by the conversion factor in the center column. Example: 38 kilograms = 84 pounds, approximately (38 x 2.2046=83.78).

U.S. TO METRIC CONVERSIONS

	Metric Measure	Multiple by	Equals U.S. Measure	Metric Measure	Multiple by	Equals U.S. Measure
Length	inches	x 2.54	= centimeters	feet	x 30.48	= centimeters
	yards	x 0.9144	= meters	miles	x 1.6093	= kilometers
Area	sq. inches	x 6.452	= sq. cm.	sq. feet	x 0.0929	= sq. meters
	sq. yards	x 0.8361	= sq. meters	sq. miles	x 2.59	= sq. kilometers
	acres	x 0.4047	= hectares			
Weight	ounces	x 28.3495	= grams	pounds	x 0.4536	= kilograms
	short tons	x 0.9072	= tonnes			
Volume	fluid ounces	x 29.574	= milliliters	pints	x 0.4732	= liters
	quarts	x 0.9463	= liters	gallons	x 3.7853	= liters
	cubic feet	x 0.0283	= cubic meters	cubic yards	x 0.7646	= cubic meters
Temp.	fahrenheit	-32 (/1.8)	= centigrade			

To calculate the approximate metric measure equivalent to a U.S. measure, simply multiply the U.S. quantity by the conversion factor in the center column. Example: 563 miles = 900 kilometers, approximately (563 x 1.6093=906.04).

© 2023 eDominer Technologies Private Limited All Rights Reserved

AIR CONTAINER DIMENSIONS

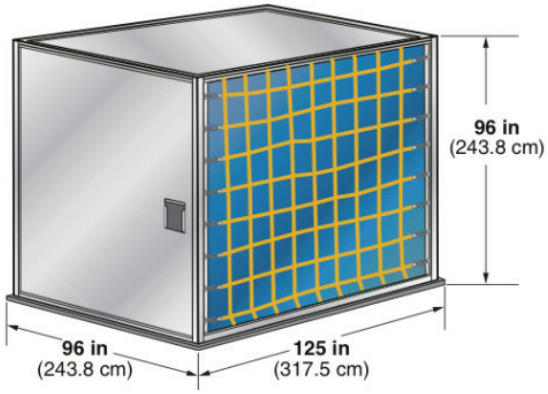

Main Deck Pallet (Equivalent to IATA Type 2)
External Displacement:
606 cu. ft / 17.16 cu. m
Maximum Gross Weight:
15,000 lb / 6,804 kg
Maximum External Dimensions:
(LxWxH) Contoured
125" x 96" x 96"
317 cm x 244 cm x 244 cm

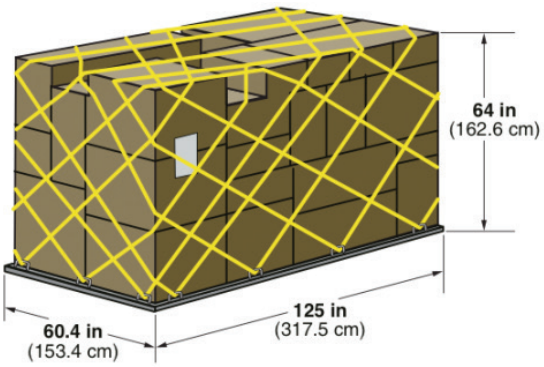

P9A Lower Deck Pallet (Equivalent to IATA Type 6)
External Displacement:
242 cu. ft / 6.9 cu. m
Maximum Gross Weight:
7,000 lb / 3,175 kg
Maximum External Dimensions:
(LxWxH) Contoured
125" x 60" x 63"
317 cm x 152 cm x 160 cm

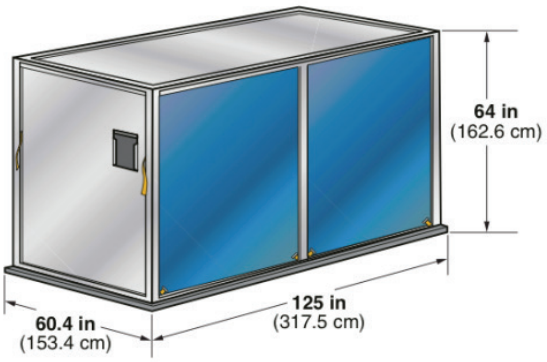

LD-11 (Equivalent to IATA Type 6)
Internal Capacity:
242 cu. ft / 6.9 cu. m
Maximum Gross Weight:
7,000 lbs / 3,176 kg
Maximum External Dimensions:
(LxWxH) Contoured
125" x 60" x 64"
317 cm x 162 cm x 162 cm

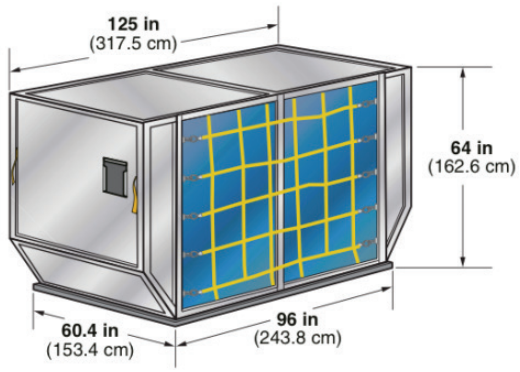

LD-8 (Equivalent to IATA Type 6A)
Internal Capacity:
243 cu. ft / 6.9 cu. m
Maximum Gross Weight:
5,400 lb / 2,450 kg
Maximum External Dimensions:
(LxWxH) Contoured
96" x 60" x 64"
228 cm x 152 cm x 162 cm

© 2023 eDominer Technologies Private Limited All Rights Reserved

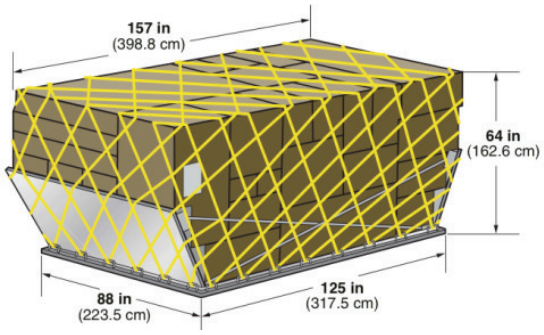

LD-7 (Equivalent to IATA Type 5)
External Displacement:
379.9 cu. ft / 10 cu. m
Maximum Gross Weight:
10,200 lb / 4,627 kg
Maximum External Dimensions:
(LxWxH) Contoured
125" x 88" x 63"
317 cm x 223 cm x 160 cm

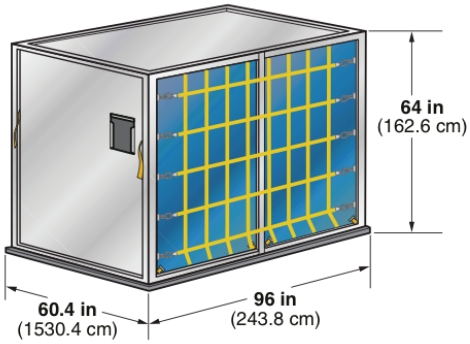

LD-4 (Equivalent to IATA Type 7A)
Internal Capacity:
174 cu. ft / 5 cu. m
Maximum Gross Weight:
5,400 lb / 2,450 kg
Maximum External Dimensions:
(LxWxH) Contoured
96" x 60" x 64"
228 cm x 152 cm x 162 cm

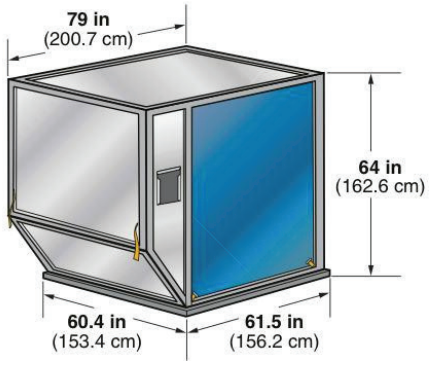

LD-3 (Equivalent to IATA Type 8)
Internal Capacity:
150 cu. ft / 4 cu. m
Maximum Gross Weight:
3,500 lb / 1,588 kg
Maximum External Dimensions:
(LxWxH) Contoured
61" x 60" x 64"
154 cm x 152 cm x 162 cm

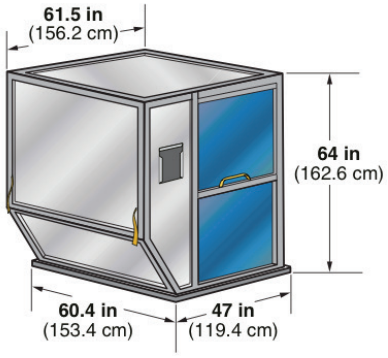

LD-2 (Equivalent to IATA Type 8D)
Internal Capacity:
120 cu. ft / 3 cu. m
Maximum Gross Weight:
2,700 lb / 1,225 kg
Maximum External Dimensions:
(LxWxH) Contoured
47" x 60" x 64"
119 cm x 152 cm x 162 cm

© 2023 eDominer Technologies Private Limited All Rights Reserved

OCEAN CONTAINER DIMENSIONS

	STANDARD 20′	STANDARD 40′	HIGH CUBE 40′
Inside Length	19′4″ (5.98 m)	39′5″ (12.01 m)	39′5″ (12.01 m)
Inside Width	7′8″ (2.33 m)	7′8″ (2.33 m)	7′8″ (2.33 m)
Inside Heigth	7′10″ (2.38 m)	7′10″ (2.38 m)	8′10″ (2.69 m)
Door Width	7′8″ (2.33 m)	7′8″ (2.33 m)	7′8″ (2.33 m)
Door Heigth	7′6″ (2.28 m)	7′6″ (2.28 m)	8′5″ (2.56 m)
Capacity	1172 ft³ (33.18 m³)	2390 ft³ (67.67 m³)	2694 ft³ (76.28 m³)
Tare Weight	4916 lb (2229 kg)	8160 lb (3701 kg)	8750 lb (3968 kg)
Max. Cargo	47999 lb (21727 kg)	59040 lb (26780 kg)	58450 lb (26512 kg)



	OPEN TOP 20′	OPEN TOP 40′
Inside Length	19′4″ (5.98 m)	39′5″ (12.01 m)
Inside Width	7′7″ (2.31 m)	7′8″ (2.33 m)
Inside Heigth	7′8″ (2.33 m)	7′8″ (2.33 m)
Door Width	7′6″ (2.28 m)	7′8″ (2.23 m)
Door Heigth	7′2″ (2.18 m)	7′5″ (2.26 m)
Capacity	1136 ft³ (32.16 m³)	2350 ft³ (66.54 m³)
Tare Weight	5280 lb (2394 kg)	8490 lb (3850 kg)
Max. Cargo	47620 lb (21600 kg)	58710 lb (26630 kg)



	REEFER 20′	REEFER 40′
Inside Length	17′8″ (5.98 m)	37′8″ (11.48 m)
Inside Width	7′5″ (2.26 m)	7′5″ (2.26 m)
Inside Heigth	7′5″ (2.26 m)	7′2″ (2.18 m)
Door Width	7′5″ (2.26 m)	7′5″ (2.26 m)
Door Heigth	7′3″ (2.20 m)	7′0″ (2.13 m)
Capacity	1000 ft³ (28.31 m³)	2040 ft³ (57.76 m³)
Tare Weight	7040 lb (3193 kg)	10780 lb (4889 kg)
Max. Cargo	45760 lb (20756 kg)	56276 lb (25526 kg)



© 2023 eDominer Technologies Private Limited All Rights Reserved

	FLAT RACK 20’	FLAT RACK 40’
Inside Length	18’5” (5.61 m)	39’7” (12.06 m)
Inside Width	7’3” (2.20 m)	6’10” (2.08 m)
Inside Heigth	7’4” (2.23 m)	6’5” (1.95 m)
Tare Weight	5578 lb (2530 kg)	2081 lb (5479 kg)
Max. Cargo	47333 lb (21469 kg)	85800 lb (38918 kg)



	COLLAPSIBLE 20’	COLLAPSIBLE 40’
Inside Length	18’4” (5.61 m)	39’7” (12.06 m)
Inside Width	7’3” (2.20 m)	6’10” (2.08 m)
Inside Heigth	7’4” (2.23 m)	6’5” (1.95 m)
Tare Weight	5578 lb (2530 kg)	12081 lb (5479 kg)
Max. Cargo	47333 lb (21469 kg)	85800 lb (38918 kg)



	PLATFORM 20’	PLATFORM 40’
Inside Length	19’11” (6.07 m)	40’0” (12.19 m)
Inside Width	8’0” (2.43 m)	8’0” (2.43 m)
Inside Heigth	7’4” (2.23 m)	6’5” (1.95 m)
Tare Weight	6061 lb (2749 kg)	12783 lb (5798 kg)
Max. Cargo	52896 lb (23993 kg)	66397 lb (30117 kg)



Did you know?

20% of employees time in a day is spent searching documents

© 2023 eDominer Technologies Private Limited All Rights Reserved

INTERNATIONAL TERMS OF DELIVERY

- Air Waybill : A non - negotiable contract for carriage of air transportation between an air carrier and a shipper.
- All-Risk Insurance : The broadest form of coverage available, providing protection against all risk of physical loss or damage from any external cause. Does not cover loss or damage due to delay, inherent vice, inadequate packaging, or loss of market.
- BAF (Bunker Adjustment Factor) : An adjustment in shipping charges to offset price fluctuations in the cost of fuel. Also known as a Bunker Surcharge (B/S). The word Bunker refers to fuel storage containers on a vessel.
- Bill of Lading (B/L) : A document issued by a common carrier to a shipper that serves as:
  1. A receipt for the goods delivered to the carrier for shipment.
  2. A definition of the contract of carriage of the goods.
  3. A Document of Title to the goods described therein.
  4. This document is generally not negotiable unless consigned "to order."
- Bill of Lading, On Board : A bill of lading acknowledging that the relative goods have been received on board a specified vessel.
- Bill of Lading, Order : A negotiable bill of lading. There are two types:
  1. A bill drawn to the order of a foreign consignee, enabling him to endorse the bill to a third party.
  2. A bill of lading drawn to the order of the shipper and endorsed by him either "in blank" or to a named consignee. The purpose of the latter bill is to protect the shipper against the buyer's obtaining the merchandise before he has paid or accepted the relative draft.
- Bonded Warehouse : A warehouse authorized by customs for storage of goods on which payment of duties is deferred until the goods are removed.
- Break-bulk Vessel : A vessel designed to handle large or oversized cargo; generally cargo unsuitable for container stowage.
- Bulk Cargo : Loose cargo that is loaded directly into a ship's hold.
- Bulk Carrier : There are two types of bulk carriers, the dry-bulk carrier and the liquid-bulk carrier, better known as a tanker. Bulk cargo is a shipment such as oil, grain, or one which is not packaged, bundled, bottled, or otherwise packed and is loaded without counting or marking.
- CAD (Cash Against Documents) : A method of payment for goods in which documents transferring title are given to the buyer upon payment of cash to an intermediary acting for the seller.
- CAF (Currency Adjustment Factor) : A surcharge on freight charges by a carrier to offset foreign currency fluctuations.
- Cargo Insurance : Insurance to protect the financial interest of the owner of the cargo in the event of a loss during transportation.
- Carnet A customs document permitting the holder to carry or send merchandise temporarily into certain foreign countries without paying duties or posting bonds. All of the goods traveling under a Carnet must be returned to the origin country to avoid penalties.
- Carrier Any person who, through a contract of carriage, undertakes to perform or procure the performance of carriage by rail, road, sea, air, inland waterway, or by a combination of modes.
- Certificate of Manufacture : A document used under a letter of credit containing an affidavit that goods have been manufactured and are being held for the account and risk of the buyer.
- Certificate of Origin : A document containing an affidavit to prove the origin of imported goods. It is used for customs or foreign exchange purposes or both. Certificates of Origin are commonly certified by an official organization in the country of origin such as a consular office or a chamber of commerce.
- CFS (Container Freight Station) : The term CFS at loading port means the location designated by carriers for the receiving of cargo to be loaded into containers by the carrier. At discharge or destination ports, the term CFS means the bonded location designated by carriers for devanning of containerized cargo.
- CFS/CFS (Pier to Pier) : The term CFS/CFS refers to cargo delivered at origin in less-than-containerload quantities to a

© 2023 eDominer Technologies Private Limited All Rights Reserved

container freight station (CFS) to be loaded into containers and to be unloaded from the container at destination CFS.

- CFS Charge (Container Freight Station Charge) : The charge assessed for services performed at the origin or destination for loading or unloading of cargo into/from containers at a CFS.
- CFS Receiving Services : The service performed at the loading port in receiving and packing cargo into containers from CFS to CY or shipside.
- Chargeable Weight : Rate for airfreight goods where dimensional weight factor exceeds the actual weight of the cargo.
- Charter : Originally meant a flight where a shipper contracted hire of an aircraft from an air carrier, but has usually come to mean any non-scheduled commercial service.
- Chassis : A rectangular steel frame, supported by springs and wheeled axles constructed to accept mounting of containers for over-the-road transport.
- CIA (Cash in Advance) : A method of payment for goods whereby the buyer pays the seller prior to shipping the goods.
- Classification : A term for the determination of the correct tariff number in a Customs tariff for admissibility and duty purposes.
- Combination Vessels : A type of ship that accommodates both container and break-bulk cargo. It can be either self-sustaining or non-self sustaining. Also known as a Container/Break-bulk Vessel.
- Commercial Invoice : Receipt for a transaction and or goods purchased (invoice) indicating the sender or seller and the receiver or purchaser. A commercial invoice should contain an itemized list of the merchandise with the complete description of goods with their unit value and extended total value. Depending on the Customs requirements of the destination country, there may be additional requirements, statement or clauses that must appear as well.
- Conference : A group of vessel operators joined together for the purpose of establishing freight rates.
- Confirmed Letter of Credit : Consignee - The individual or company to whom a seller or shipper sends merchandise and who, upon presentation of necessary documents, is recognized as the merchandise owner for the purpose of declaring and paying customs duties.
- Consignor : A term used to describe any person who consigns goods to himself or to another party in a bill of lading or equivalent document. A consignor might be the owner of the goods, or a freight forwarder who consigns goods on behalf of his principal.
- Consolidated Shipment : A method of shipping whereby an agent (freight forwarder or consolidator) combines individual consignments from various shippers into one shipment made to a destination agent, for the benefit of preferential rates. (Also called "groupage") The consolidation is then de-consolidated by the destination agent into its original component consignments and made available to consignees. Consolidation provides shippers access to better rates than would be otherwise attainable.
- Consolidator : An agent who brings together a number of shipments for one destination to qualify for preferential rates.
- Consular Documents : Special forms signed by the consular office of a country to which cargo is destined. Consular Invoice A document required by some countries describing a shipment of goods and showing information such as the consignor, consignee, and value of the shipment. Certified by a consular official, a consular invoice is used by the country's customs officials to verify the value, quantity, and nature of the shipment.
- Date Draft : A draft that matures in a specified number of days after issuance without regard to date of acceptance.
- DDC : Destination Delivery Charge.
- DDP (Delivered Duty Paid) : Also known as "free domicile" or "free house."
- DDU (Delivered Duty Unpaid) : This reflects the emergence of "door-to-door" intermodal or courier contracts or carriage where only the destination customs duty and taxes (if any) are paid by consignee.
- Dead Freight : Freight charges paid by the charterer of a vessel for the contracted space which is left partially unoccupied. Deck Cargo : Cargo carried on deck rather than stowed under deck. On-deck carriage is required for certain commodities, such as explosives.
- Demurrage : A penalty for exceeding free time allowed for loading or unloading at a pier or freight terminal. Also a charge for undue detention of transportation equipment or carriers in port while loading or unloading.
- Density : Weight units per unit of volume.
- Dim Weight (Dimensional Weight) : An airfreight term used to describe the results of computing the chargeable weight

© 2023 eDominer Technologies Private Limited All Rights Reserved

from the cubic measurement of a shipment.

- Draft : An unconditional order in writing from one person (the Drawer) to another (the Drawee), directing the drawee to pay a specified amount to a named drawer on presentation or on a fixed date.
- Drawee : The individual or firm on whom a draft is drawn and who owes the stated amount to the drawer
- EDI or EDIFACT (Electronic Data Interchange for Administration, Commerce and Transport) : From the United Nations-backed electronic data interchange standards body. this is a set of standards that are used to define data sets in certain documents to standardize them for electronic transmission from one format to another.
- Endorsement in Blank :

1. Commonly used on a bank check, an endorsement in blank is an endorsement to the bearer. It contains only the name of the endorser and specifies no particular payee.

2. Also, a common means of endorsing bills of lading dawn to the order of the shipper.

- Export License : A document secured from a government, authorizing a shipper to export a specific quantity of a particular commodity to certain country. An export license is often required when a government places restrictions upon exports.
- Export Trading Company : A corporation or other business entity organized and operated primarily for the purpose of exporting goods and services, or of providing export-related services to other companies.
- FCL : Full Container Load, Full Car Load.
- Federal Maritime Commission (FMC) : The U.S. Federal agency responsible for overseeing Ocean Carriers, Conferences, NVOCC's and Ocean Freight Forwarders (now called OTI's : Ocean Transportation Intermediaries) at ocean ports and inland waterways.
- Feeder Vessel : A vessel that connects with a line vessel to service a port not directly served by that line vessel.
- FEU (Forty foot equivalent) : Term normally used in ocean freight rate negotiations referring to the equivalent of two twenty foot ocean containers.
- FIATA : International Federation of Freight Forwarders Associations.
- Flag Carrier : An airline or vessel of one national registry whose government gives it partial or total monopoly over international routes.
- Flat Bed Chassis : A semi-trailer with a level bed and no sides or tops. The floor is a standard height from the ground.
- Flat Rack : A platform designed with the flexibility to carry oversized cargo on board container vessels. It can be loaded from the sides and top, usually having adjustable or removable bulkheads at the front and back.
- Force Majeure : The title of a standard clause found in marine contracts exempting the parties for non-fulfillment of their obligations by reasons of occurrences beyond their control, such as earthquakes, floods, or war.
- Foreign Trade Zone (FTZ) : A port designated by the government for duty-free entry of any non-prohibited goods. Merchandise may be stored, displayed, and used for manufacturing within the zone and re-exported without duties being paid. Duties are imposed only when the original goods or items manufactured from those goods pass from the zone into an area of the country subject to customs authority. Also called a Free Trade Zone.
- Foreign Trade Zone Entry : A form declaring goods which are brought duty free into a Foreign Trade Zone for further processing or storage and subsequent exportation from the zone into the commerce of another country.
- Forwarder, Freight Forwarder, Foreign Freight Forwarder : An independent business that dispatches shipments for exporters for a fee. The firm may ship by land, air, or sea, or it may specialize. Usually it handles all the services connected with an export shipment, including preparation of documents, booking cargo space, warehousing, pier delivery, and export clearance. The firm may also handle banking and insurance services on behalf of a client.
- Free of Particular Average (FPA) : A marine insurance clause relating to the recoverability of partial and total losses from perils of the sea. The American and English coverage's vary as follows:

1. American Conditions (FPAAC). The underwriter does not assume responsibility for partial losses unless caused by sinking. stranding, burning, or colliding with another vessel.

2. English Conditions (FPAEC). The underwriter assumes responsibility for partial losses.

- FTR : The Foreign Trade Regulations (FTR) are a set of regulations placed on international trade in the U.S. They are established and updated by the U.S. Census Bureau. It is in the FTR that the requirement to file the Electronic Export Information (EEI)

© 2023 eDominer Technologies Private Limited All Rights Reserved

through the Automated Export System (AES) can be found.

- Full Truckload (FTL) : A full truckload carrier is a carrier that contracts the entirety of a truck's carrying capacity to a single customer. Often referred to as a truckload carrier.
- General Agreement on Tariffs and Trade (GATT) : A legal agreement between many countries which promoted international trade by eliminating trade barriers such as tariffs and quotas. It was succeeded by the World Trade Organization (WTO) in 1995, with the original GATT text remaining part of the WTO framework.
- General Order : When U.S. Customs and Border Protection (CBP) orders shipments without entries to be kept in their custody.
- Gross Domestic Product (GDP) : The total value of all goods and services produced by a country.
- Gross Vehicle Weight (GVW) : The total weight of a vehicle including the weight of the vehicle itself and any attached containers.
- Harbor : A place where ships stop to resupply and load or unload cargo.
- Harbor Master : An official responsible for overseeing harbor operations.
- Hatch : The opening on the deck of a ship that gives access to the cargo hold.
- Hazardous Materials (HazMat) : May be used interchangeably with the term "dangerous goods," hazardous materials are goods that may pose a threat to safety because they are poisonous, toxic, corrosive, explosive, flammable, etc. More precisely, hazardous materials are defined by the U.S. Department of Transportation in accordance with the Federal Hazardous Material Law. It is more common to see the term "hazardous materials" used when shipping domestically within the U.S., whereas the term "dangerous goods" is used more often when shipping internationally. Shipping hazardous materials may require special documentation or packaging to ensure safety.
- HMF : Harbor maintenance fee.
- House Bill of Lading : A house bill of lading (HBL) is a document issued by a freight forwarder or a non-vessel operating company (NVOCC) to a shipper to acknowledge receipt of their items for shipment. In other words, it's a receipt for the goods. This is different from the Master Bill of Lading, which is issued by the carrier and is a contract of carriage for the goods.
- HS : The Harmonized System is an internationally accepted system used to classify products. The first six digits of an HS code are universal across all countries, but each country will add additional digits to further specify products. HS codes play a role in determining import and export controls as well as duty rates. The code for a particular product is often called its tariff classification, as is the process for finding the right code.
- HTSUS : The Harmonized Tariff Schedule of the United States is a classification system used for importing into the United States. It is based on the internationally recognized Harmonized System (HS).
- IMDG : International Maritime Dangerous Goods code; the regulations established by the International Maritime Organization (IMO) for the international transport of dangerous goods.
- Import : Shipment of goods into a country. Opposite of export.
- Import Declaration : Information submitted by an importer or their agent to their country's customs authority before or upon importation of goods, such as the contact details of the importer, how the goods are being transported and the tariff classifications and values of the items on the shipment.
- Import License : A government-issued permit authorizing a party to import a good into the country.
- In Bond : An import or export shipment that has not yet cleared customs is referred to as in bond.
- Incomerms : Incoterms are universal trade terms published by the International Chamber of Commerce (ICC.) They consist of three-letter codes that are intended to clearly communicate the tasks, costs and risks associated with the transportation and delivery of goods in an international transaction. They describe how responsibility is allocated between the seller and the buyer for different parts of the transaction.
- Indirect Exporting : A sale by an exporter to the buyer through a domestically located intermediary, such as an export management company or an export trading company.
- Inspection Certificate : A document required by some purchasers and countries to attest to the specifications of the goods shipped. The inspection is usually performed by a third party.
- Insurance Certificate : A document prepared by the exporter or freight forwarder as evidence that insurance against loss or damage has been obtained for the goods.

© 2023 eDominer Technologies Private Limited All Rights Reserved

Expand Advantage

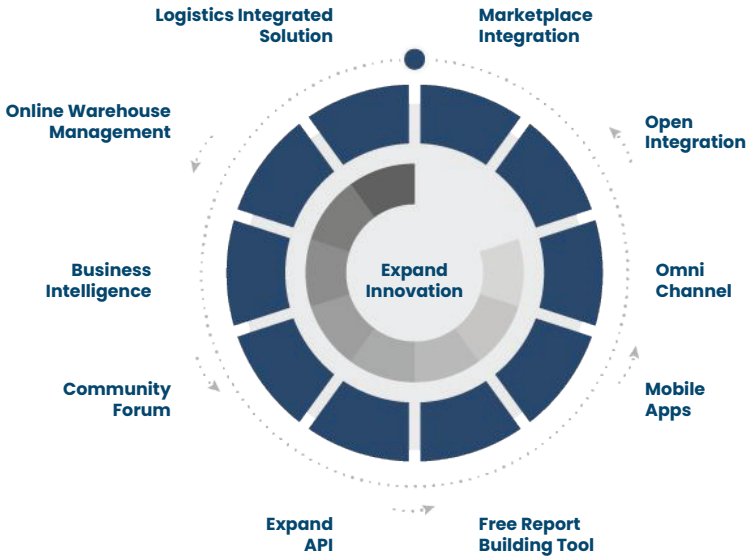

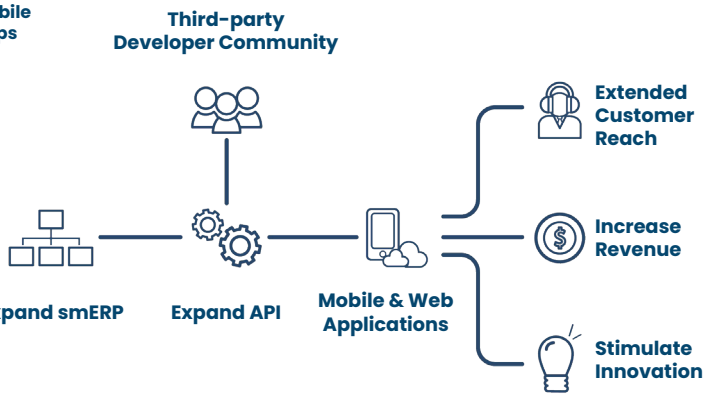

Single Integrated ERP

Manage your manufacturing business completely online with
ONE INTEGRATED ERP SOLUTION

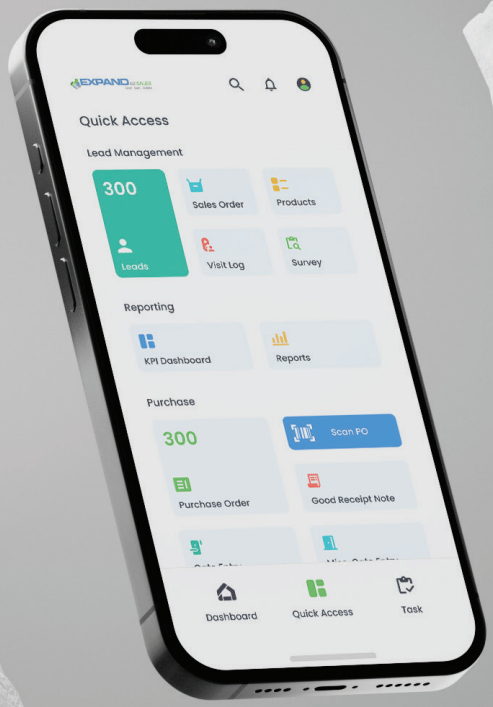

GET IT ON Google Play

Download on the App Store

© 2023 eDominer Technologies Private Limited All Rights Reserved

+91 9007026542 www.expanderp.com sales@edominer.com

- Intellectual Property (IP) : The collective term used to refer to new ideas, inventions, designs, writings, films and so on that are protected by copyright, patent or trademark. See also, 10 Terms Exporters Should Know about Intellectual Property.
- Interchange Point : A location where freight is transferred from one carrier to another.
- Intermediate Bulk Container : Also commonly known as a tote, IBC tote or IBC tank, IBC totes can be used to ship liquids, pastes, semi-solids and solids. They are used in a variety of industries and applications, including agriculture, construction, industrial lubricants, collecting rainwater and many others. The two most common totes are the composite 275-gallon and 330-gallon tanks made of a high-density polyethylene (HDPE) inner liner, surrounded by a galvanized steel cage. They take up a similar footprint to a standard pallet of 48" L x 40" W x 46" H.
- Intermodal : Intermodal transportation is the movement of goods via more than one type of transportation (e.g. air, rail, sea, truck, etc.). An intermodal container is one that can be used in different modes of transport without having to unload the goods and reload them at each point at which the mode of transport changes. In the context of international trade, intermodal container is usually synonymous with container.
- International Chamber of Commerce (ICC) : The ICC plays a role in rule setting, dispute resolution, and policy advocacy in international trade, supporting the commerce goals of the United Nations and the World Trade Organization.

International Trade Administration (ITA) : A U.S. Department of Commerce bureau responsible for export promotion programs.

- Inward Foreign Manifest (IFM) : A document listing all cargo entering a country. Required by all world ports and is the primary source from which import duties are assigned.
- ISPM 15 : International Standards for Phytosanitary Measures No. 15 (ISPM 15) is an international environmental standard for treating wood packaging materials (WPM) in order to curb the spread of plant pests. Under the ISPM 15 rules, all wood packaging materials such as pallets, crates and boxes must be debarked, then heat treated or fumigated to eliminate insects or diseases which could be harmful to ecosystems. The United States Department of Agriculture (USDA) adopted this standard in September 2005.
- ITAR : The International Traffic in Arms Regulations regulate the export of space- or defense-related products and are enforced by the U.S. Department of State.
- JIT : Abbreviation for "just in time." A method of inventory control which minimizes warehousing and in which the container itself acts as a movable warehouse and arriving on schedule is crucial.
- J-List : Found in 19 CFR 134.33, the J-List is a list of items exempt from country of origin marking requirements when importing into the United States. Items on the J-list are usually exempt because they are either incapable of being marked (e.g. liquids) or marking them is impractical (e.g. fine art).
- Laden : Loaded aboard a vessel.
- Landed Cost : The total cost of an international shipment, found by adding the price paid by the buyer to the seller, shipping costs, shipment insurance and all applicable import duties and fees.
- Less-than-Truckload, Less-than-Load (LTL) : A medium shipment, typically between 150 pounds and 20,000 pounds. An
- LTL carrier mixes freight from several customers in a single truckload. May also be called less-than-container (LCL).
- Letter of Credit : Also called a documentary collection and often abbreviated as LC or L/C, a letter of credit is a written commitment by a bank issued after a request by an importer that payment will be made to an exporter provided that the terms of the letter of credit have been met as evidenced by the presentation of certain documents.
- License Exception : Certain criteria may be met that allow an exporter to export a product without an export license in cases where an export license would normally be required. These criteria are called license exceptions.
- Licensing : An arrangement in which a company sells the rights to use its products or services but retains some control.
- Liquidated Damages : The penalty a seller must pay the buyer if a project does not meet the standards or deadline outlined in the sales contract.
- Liquidation : In the context of importing, liquidation is the process in which the customs authority finalizes its review of an entry and calculates the exact duties owed.
- List : The amount that a vessel tilts from the vertical, measured in degrees.
- Logistics : The management of the flow of products as they are transported from the point of origin to their final destination. A logistics company is a general term for a company that provides logistics services, which may include freight forwarding, customs brokerage and/or consulting services.

© 2023 eDominer Technologies Private Limited All Rights Reserved

- Longshoreman : A port employee tasked with loading and unloading ships.
- Malpractice : In the context of shipping, malpractice refers to situations in which a carrier illegally gives preference to a customer in order to attract their business.
- Maritime : Relating to transport by sea.
- Marking : Letters, numbers or other symbols placed on packaging used for identification purposes.
- Master Bill of Lading : A bill of lading issued by a carrier to a freight forwarder acknowledging receipt of container for shipment. This is different from a house bill of lading which is issued by a freight forwarder to a shipper, acknowledging receipt of their items for shipment.
- Most Favored Nation (MFN) : A status accorded by one national government to another in the context of international business. A country with MFN status may not be treated less favorably in international transactions than any other country with MFN status.
- MPF : Merchandise processing fee.
- NAFTA : The North American Free Trade Agreement was established in 1994 to harmonize trade between the United States, Canada and Mexico. Companies located in these countries may be eligible for reduced duty rates when importing if their goods qualify under the terms of NAFTA. NAFTA was replaced on July 1, 2020, by the United States-Mexico-Canada Agreement (USMCA).
- NCBFAA : The National Customs Brokers and Forwarders Association of America is an organization representing the interests of customs brokers and freight forwarders in the U.S. They publish guidelines on best practices, including specific guidelines on how to create a shipper's letter of instruction (SLI) when authorizing freight forwarders to file through the Automated Export System (AES) on behalf of the exporter.
- NEC, NES : Not elsewhere classified, not elsewhere specified.
- Negotiable/Non-Negotiable : A negotiable instrument is a document that can be transferred from its original holder to a third party. A non-negotiable document cannot be transferred to another party. An inland or ocean bill of lading may be either negotiable or non-negotiable; a bill of lading consigned "to order" or "to order of shipper" is negotiable once it is endorsed on the back by the shipper or their representative. Air waybills are always non-negotiable.
- National Carrier : A flag carrier owned or controlled by the state.
- Net Terms : Free of charters' commission.
- Net Weight (Actual Net Weight) : The weight of the goods alone without any immediate wrappings; e.g., the weight of thecontents of a tin can without the weight of the can.
- Non-Vessel Operating Common Carrier (NVOCC) : In the United States, a term for an FMC-licensed cargo consolidator of shipments in ocean trade, generally arranging for or performing consolidation and containerization functions. In trade lanes that do not include the U.S.A., NVOCC's operate under different rules and governmental licensing may not be a requirement.
- NOS : Not Otherwise Specified.
- NT : Net Tons.
- OD : Outside Diameter.
- Open Account : A trade arrangement in which goods are shipped to a foreign buyer without guarantee of payment such as a note, L/C, or other formal written evidence of indebtedness.
- Open Policy : A cargo insurance policy that is an open contract; e.g., it provides protection for all shipments in transit within a specified geographic trade area for a limited period of time. It is referred to as "open" because it does not require reporting of individual shipments. Summary or grouped reporting requirements vary with different policies.
- O/R : Owner's Risk.
- Part Charter : Where part of an airline's scheduled flight is sold as if it were a charter in its own right. Often incorrectly used as a synonym for split charter.
- Part Load Charter : Where a part of an aircraft's load is discharged at one destination and a part of it at another. This is distinct from a split charter where a number of consignments are carried to the same destination. Inbound, part loads are treated as single entity charters under the regulations in most countries. Particular Average (PA) - Partial loss or damage to goods.
- Perils of the Sea : Fortuitous accidents or casualties peculiar to transportation on navigable water, such as sinking, collision of vessel, striking a submerged object, or encountering heavy weather or other unusual forces of nature.
- Perishables : Any cargo that loses considerable value if it is delayed in transportation. This usually refers to fresh fruit and

© 2023 eDominer Technologies Private Limited All Rights Reserved

vegetables.

- Phytosanitary Inspection Certificate : A certificate issued by an exporting countries' Department of Agriculture indicating that a shipment has been inspected and is free of harmful pests and plant diseases.
- Pilferage As used in marine insurance policies, the term denotes petty thievery-the taking of small parts of a shipment-as opposed to the theft of a whole shipment or large unit. Many ordinary marine insurance policies do not cover against pilferage, and when this coverage is desired it must be added to the policy.
- Port Marks : An identifying set of letters, numbers, or geometric symbols followed by the name of the port of destination that are placed on export shipments. Foreign government requirements may be exceedingly strict in the matter of port marks.
- Port of Discharge : A port where a vessel is off-loaded and cargo discharged.
- Port of Entry : A port at which foreign goods are admitted into the receiving country.
- Port of Loading : A port where cargo is loaded aboard the vessel, lashed, and stowed.
- Prepaid Freight : Generally speaking, freight charges both in ocean and air transport may be either prepaid in the currency of the country of export or they may be billed collect for payment bythe consignee in his local currency. On shipments to some countries, however, freight charges must be prepaid because of foreign exchange regulations of the country of import or rules of steamship companies or airlines.
- Prima Facie : A Latin term frequently encountered in foreign trade that means "on first appearance." When a steamship company issues a clean bill of lading, it acknowledges that the goods were received "in apparent good order and condition" and this is said by the courts to constitute prima facie evidence of the conditions of the containers; that is, if nothing to the contrary appears, it must be inferred that the cargo was in good condition when received by the carrier.
- Proof of Delivery (POD) : The delivery receipt copy of a freight bill indicating the name of the person who signed for a package with the date and time of delivery.
- Reefer : A refrigerated container, trailer or railcar for transporting perishables.
- Ro/Ro (Roll-on/Roll-Off) Vessel : A ship designed to accommodate cargo that is rolled on and rolled off. Many Ro/Ro vessels can also accommodate containers and/or break-bulk cargo.
- Route : An established passage, from the point of departure to the terminating station.
- Ship's Manifest : An instrument in writing containing a list of the shipments constituting the ship's cargo.
- Shipment : Freight tendered to a carrier by one consignor at one place at one time for delivery to one consignee at one list goods that are duty free and those subject to import duty, giving the rate of duty in each case. There are various classes of customs duties.
- Temperature Controlled Cargo : Any cargo requiring carriage under controlled temperature.
- TEU : A twenty-foot equivalent unit (6.1m). A standard unit for counting containers of various lengths and for describing container ship or terminal capacity. A standard 40' container (FEU) equals 2 TEUS.
- THC (Terminal Handling Charge) : A charge for handling services performed at terminals.
- Time Draft : A draft that matures in a certain number of days, either from acceptance or the date of the draft.

Ton Freight rates for liner cargo generally are quoted on the basis of a certain rate per ton, depending on the nature of the commodity. This ton, however, may be a weight ton or a measurement ton.

- Ton-Deadweight : The carrying capacity of the ship in terms of the weight in tons of the cargo, fuel, provisions, and passengers which a vessel can carry.
- Tracking : A system of recording movement intervals of shipments from origin to destination.
- Transshipment : The transfer of a shipment from one carrier to another in international trade, most frequently from one ship to another. Because the unloading and reloading of delicate merchandise may cause damage, transshipments are avoided whenever possible.
- Valuation Charges : Additional transportation charges assessed shippers who declare a value of goods higher than the value of carriers' limits of liability.
- Volume Weight : An international airfreight term used to describe the results of computing the chargeable weight from the cubic measurement of a shipment.
- War Risk : The possible aggressive actions against a ship and its cargo by a belligerent government. This risk can be insured by a marine policy with a risk clause.

© 2023 eDominer Technologies Private Limited All Rights Reserved

- War Risk Insurance : Insurance issued by marine underwriters against war-like operations specifically described in the policy. In former times, war risk insurance was taken out only in times of war, but currently many exporters cover most of their shipments with war risk insurance as a protection against losses from derelict torpedoes and floating mines placed during former wars, and also as a safeguard against unforeseen warlike developments. In the U.S.A., war risk insurance is written in a separate policy from the ordinary marine insurance; it is desirable to take out both policies with the same underwriter in order to avoid the ill effects of a possible dispute between underwriters as to the cause (marine peril or war peril) of a given loss.
- Warehouse Receipt : A receipt of commodities deposited in a warehouse identifying the commodities deposited. It is non- negotiable if permitting delivery only to a specified person or firm, but it is negotiable if made out to the order of a person or firm or to a bearer. Endorsement (without endorsement if made out to bearer) and delivery of a negotiable warehouse receipt serves to transfer the property covered by the receipt. Warehouse receipts are common documents in international banking.
- Warehouse-to-Warehouse : A clause in marine insurance policy whereby the underwriter agrees to cover the goods while in transit between the initial point of shipment and the point of destination with certain limitations, and also subject to the law of insurable interest. The warehouse-to-warehouse clause was once extremely important, but marine extension clauses now often override its provisions.
- Weight :

Gross : The weight of the goods including packing, wrappers, or containers, both internal and external. The total weight as shipped.
Net : The weight of the goods themselves without the inclusion of any wrapper. Tare : The weight of the packaging or container.
Weight/Measurement Ton In many cases, a rate is shown per weight/measurement ton, carrier's option. This means that the rate will be assessed on either a weight ton or measurement ton basis, whichever will yield the carrier the greater revenue.
Weight Ton : Metric measure equals 1000 Kilograms; in English measure a short ton is 2000 pounds, a long ton is 2240 pounds.

- Weight Load Factor : Payload achieved as against available capacity, expressed as a percentage. Cargo is frequently limited by volume rather than weight; load factors of 100 percent are rarely achieved. With Average (WA) - A marine insurance term meaning that shipment is protected for partial damage whenever the damage exceeds a stated percentage.
- With Particular Average (WPA) : An insurance term meaning that partial loss or damage of goods is insured. The damage generally must be caused by sea water, and many terms specify a minimum percentage of damage before payment. It may be extended to cover loss by theft, pilferage, leakage and breakage, or other perils depending on the nature of the cargo.
- W/M : Weight and/or Measurement.

DISCLAIMER



The content herewith is provided for information purposes only. The material presented here cannot be guaranteed as to accuracy and timeliness. Those relying on information presented here may do so at their own risk. The content herewith has been collated from various Internet sources and search engines. These may be copyrights of their respective owners. The eDominer logo and EXPAND smERP logo are copyright and registered trademark of eDominer.

© 2023 eDominer Technologies Private Limited All Rights Reserved

PRODUCT DNA

Module listing with fuctionality overview				
Finance Management : Financial management provides comprehensive financial capabilities including accounting, budgeting, financial reporting, general ledger, accounts receivable, accounts payable,multi-currency transactions, Journal, BRS, Trial, Balance Sheet, Profit Loss, Credit Debit Notes, Debtor Control, TDS handling, Approvals.	✓	✓	✓	✓
CRM : Powerful CRM with interaction management and customer history. Records customer pricelist, preferences and attaching of digital files, bank details, export details, statutory details, dunning letters.	✓	✓	✓	✓
Sales Management : Opportunity, quote, order mgmt, sales planning, fulfilment. Complete integration across sales and finance, reducing manual entry and risk of error. Approvals, Auto emailing, debtor control, tax computation, 3 way matching and file attachment provision.	✓	✓		✓
Purchase - Order Management : Integrated Purchase, finance, inventory and fulfilment. Enquiry, quotation, order, payments. Complete procurement planning, reorder level based indenting, approvals, auto emailing, tax computation, with 3 way matching and file attachment provision.	✓	✓	✓	✓
Inventory Management : Extensive inventory management, include bin and lot management, demand-based replenishment, multi- location inventory. Control of stock evels. Serial based tracing, barcode integration, stock transfer management, approvals and file attachment provision.	✓	✓	✓	✓
Document Tracking : Attachment of other digital files online where they're immediately accessible to the sales, finance and other teams. Track Form C, F, H, Way bill etc... or any user defined tracking.	✓	✓	✓	✓
Exports and Imports : "PI, Order, LC, forward contract, licenses, insurance, export invoices, packing list, duty drawback, bonds, foreign currency fluctuations, export realization, bill of lading and standard prints of all documents like Invoice, Packing list, Commercial Invoice, Shipping bill, Certificate of Origin, Bill of Exchange".		✓		
Transport and Lorry Hire : Transport modules offer Consignment, Paid, To Pay, To be billed, Lorry hire, Unloading and Delivery tracking, Godwon Inventory, Lorry Advance, Balance tracking. Ready integration with any GPS tracking system. Part consignment, manifest options, route and price list.			✓	
Production and Jobwork : "Handles Advice, Store Indent, BOM, MRP, Raw material flow and routing. Control shop floor with Job and Processes. Job work, sub contractor outstanding and inventory with complete quality control system."	✓			
Fixed Assets Management : Effective management of company assets, Maintenance, Stores consumption, capitalization, SLA, Depreciation computation.	ADD ON (Can be added in any edition)			

Manufacturing Export Logistics Retail

© 2023 eDominer Technologies Private Limited All Rights Reserved

+91 9007026542 www.expanderp.com sales@edominer.com

Module listing with fuctionality overview

Payroll : Time & Attendance Device integration, Payslip, ESI, PF, P Tax, Leave, Loan, Arrear, Advance, Tax Computation, Out of office, alternate working day scheduling, Pay Check printing and Approvals with Employee salary and name masking.	ADD ON (Can be added in any edition)			
Loyalty Management : Provides customer registration portal for walk in customers and management of loyalty points on merchandise transactions. Customer can login and review transactions and points status. Option to redeem points at Point of sale, news letter management giving customers at finest experience.				✓
Schemes and Offers Management for POS : Provides scheme definition and offer management on relatime mode. Schemes can be cominations of qty.value, specific item or groups. User friendly ways to give attractive discounts and control the sales at stores. Also gift vouchers can be managed for the module effectively.				✓
Point of Sale : Easy and fully swipe card and barcode scanner integrated Point of sales for easy billing and printing, realtime inventory check with serial number based security.				✓
Knowledge Base : Provides an intranet portal that is used as a knowledge management repository, that can be tailored to effectively providing and shared business information interactively within the organisation and is interconnected across all modules in the ERP.	ADD ON (Can be added in any edition)			
Self Service : A full-featured online sales web store that provides customers with an intuitive online shopping experience, making it easier for customers to do business with you. Allow your customers and partners to purchase products, generate and view quotes, view orders along with shipping status, request returns, repeat past orders, and make payments.	ADD ON (Can be added in any edition)			
Business Intelligence : "BI provides real-time analytics and visibility of business data across the ERP suite, enabling better decision making. Access multiple levels of consolidated reporting displayed in real-time dashboards, Ad hoc, standard and custom reports. Complete drill-down to specific transaction for Finance, Sales and inventory in standard user friendly excel interface."	ADD ON (Can be added in any edition)			
System Training, Support and Handholding : Comprehensive online training will be provided, ensuring all licensed staff is trained prior to system access. Support and maintenance will continue post project completion for bug fixing, maintenance. For customized implementations tailored traning and on demand on site training will be provided at an extra cost.	✓	✓	✓	✓
Security : Exhaustive security design, security is configurable based on Role-level access, at individual user or group level, throughout the application providing specific role with specific permissions to only see and use the features related to his or her, own job.	✓	✓	✓	✓
Reporting : Provides host of standard reports, Accounts, Sales, Purchase, Inventory, etc providing graphical and transactions summary's at click of a button,these can be export in to PDF, Excel, Word.	✓	✓	✓	✓
	Ask for standard report samples/formats in demo			

Manufacturing **Export** **Logistics** **Retail**

© 2023 eDominer Technologies Private Limited All Rights Reserved

+91 9007026542 www.expanderp.com sales@edominer.com

OUR OFFERINGS

EXPAND Lite
Get Set Grow

- Business Management
- Purchase and Sales Management
- Inventory Management
- Accounting Management
- E-Way Bill/E-Invoice/TDS
- Production Journal
- Document Management
- Retail POS
- Data Security
- Mobile App

₹ 1800

PER CONCURRENT USER/MONTH
Payable Annualy

EXPAND smERP®
Get Set Grow

- Production Planning
- Bill Of Material & Costing
- Vendor Management
- Jobwork & Work Order Tracking
- Inventory aging and batch/lot control
- Barcode printing, scanning & weigh bridge link
- Tolerance Based Inward Control
- Complete Information Management
- Maximize Output, Save Time
- Fully Customisable

₹ 2500

PER CONCURRENT USER/MONTH
Payable Annualy

EXPAND eziSALES

- Leads
- Contacts
- Leads Dashboard
- Call log
- Visit log
- Accounting
- Product catalogue
- Reports
- Desktop ERP Login

₹ 0

PER CONCURRENT USER/MONTH

The Best ERP Software For Order Management, Production, Inventory and Jobwork

© 2023 eDominer Technologies Private Limited All Rights Reserved

+91 9007026542 www.expanderp.com sales@edominer.com